MILLWORK ARTISANS, LLC

METAL BI-FOLD DOOR (HVHZ) (IMPACT)

GENERAL NOTES:

1. THE PRODUCT SHOWN HEREIN IS DESIGNED AND MANUFACTURED TO COMPLY WITH THE CURRENT EDITION FLORIDA BUILDING CODE (FBC) **INCLUDING** HVHZ. ALL PRODUCTS UNDER THE SCOPE OF THIS DOCUMENT HAVE BEEN EVALUATED ACCORDING TO THE FOLLOWING:
   - ASTM E330-14(21)
   - TAS 201-94
   - TAS 202-94
   - TAS 203-94

2. ADEQUACY OF THE EXISTING STRUCTURAL CONCRETE/MASONRY, 2X STUD FRAMING AS A MAIN WIND FORCE RESISTING SYSTEM CAPABLE OF WITHSTANDING AND TRANSFERRING APPLIED PRODUCT LOADS TO THE FOUNDATION IS THE RESPONSIBILITY OF THE ENGINEER OR ARCHITECT OF RECORD FOR THE PROJECT OF INSTALLATION.

3. 1X AND 2X BUCKS (WHEN USED) SHALL BE DESIGNED AND ANCHORED TO PROPERLY TRANSFER ALL LOADS TO THE STRUCTURE. BUCK DESIGN AND INSTALLATION IS THE RESPONSIBILITY OF THE ENGINEER OR ARCHITECT OF RECORD FOR THE PROJECT OF INSTALLATION.

4. THE INSTALLATION DETAILS DESCRIBED HEREIN ARE GENERIC AND MAY NOT REFLECT ACTUAL CONDITIONS FOR A SPECIFIC SITE. IF SITE CONDITIONS CAUSE INSTALLATION TO DEVIATE FROM THE REQUIREMENTS DETAILED HEREIN, A LICENSED ENGINEER OR ARCHITECT SHALL PREPARE SITE SPECIFIC DOCUMENTS FOR USE WITH THIS DOCUMENT.

5. APPROVED IMPACT PROTECTIVE SYSTEM **IS NOT REQUIRED** TO PROTECT THIS PRODUCT IN AREAS REQUIRING IMPACT RESISTANCE.

6. MATERIAL: STEEL (MIN. Fy = 33 ksi).

7. ALL STRUCTURAL MATERIALS & DISSIMILAR METALS SHALL BE PROTECTED, TREATED, PAINTED, COATED, AND/OR ISOLATED AS REQUIRED IN THE APPLICABLE SECTIONS OF THE CURRENT FLORIDA BUILDING CODE AND REFERENCED DESIGN SPECIFICATIONS.

8. GLASS MEETS THE REQUIREMENTS OF ASTM E 1300 GLASS CHARTS. SEE SHEET 1 FOR GLAZING DETAILS.

TABLE OF CONTENTS

SHEET	SHEET DESCRIPTION
1	GENERAL NOTES AND GLAZING DETAIL
2	TYPICAL ELEVATION AND DESIGN PRESSURE TABLE
3	ANCHOR LAYOUT
4	VERTICAL SECTIONS
5	HORIZONTAL SECTIONS
6	INSTALLATION DETAILS AND NOTES
7	BILL OF MATERIALS AND COMPONENTS

DESIGN PRESSURE RATING

FRAME SIZE	DESIGN PRESSURE	MISSILE RATING
SEE SHEET 2		LARGE AND SMALL MISSILE IMPACT

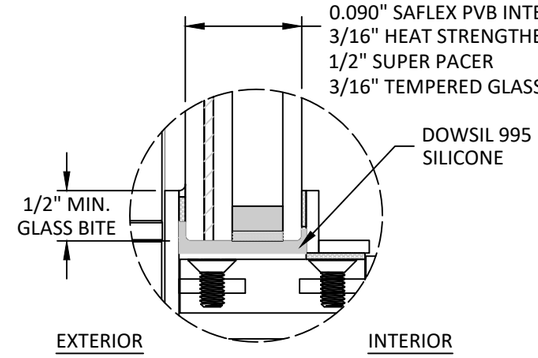

GLAZING DETAIL

GLAZING NOTES:

1. GLASS TYPE & THICKNESS COMPLIES WITH ASTM E1300 REQUIREMENTS AS WELL AS APPLICABLE SAFETY GLAZING REQUIREMENTS PER THE FBC. TEMPER AND SAFETY GLAZING REQUIREMENTS SHALL BE REVIEWED ON A SITE SPECIFIC BASIS.
2. SETTING BLOCK DUROMETER HARDNESS OF 70-90 (SHORE A) AS REFERENCED IN FBC CHAPTER 24.
3. SETTING BLOCKS TO BE LOCATED AT 1/4 SPAN LENGTH FOR GLASS WIDER THAN 36" AS PER FBC CHAPTER 24.
4. D.L.O. AND DESIGN PRESSURES MAY NOT EXCEED MAX VALUES IN SHEET 2.

MILLWORK artisans

MILLWORK ARTISANS, LLC
4600 GOER DR STE 201
NORTH CHARLESTON, SC 29406
PH: (843) 577-3348

TITLE: METAL BI-FOLD DOOR (HVHZ) (IMPACT) GENERAL NOTES & GLAZING DETAILS

PREPARED BY: BUILDING DROPS, INC.
1900 NE MIAMI COURT, SUITE 2-15
MIAMI, FL 33132
PH: (954) 399-8478
FAX: (954) 744-4738
WEB: www.buildingdrops.com

REMARKS	BY	DATE

THE INSTALLATION DETAILS DESCRIBED HEREIN ARE GENERIC AND MAY NOT REFLECT ACTUAL CONDITIONS FOR A SPECIFIC SITE. IF SITE CONDITIONS CAUSE INSTALLATION TO DEVIATE FROM THE REQUIREMENTS DETAILED HEREIN, A LICENSED ENGINEER OR ARCHITECT SHALL PREPARE SITE SPECIFIC DOCUMENTS FOR USE WITH THIS DOCUMENT.

Digitally signed by Hermes F. Norero, P.E
Reason: I am approving this document
Date: 2025.10.21 18:17:55 -04'00'

HERMES F. NORERO LICENSE No. 73778 STATE OF FLORIDA PROFESSIONAL ENGINEER

HERMES F. NORERO P.E.
FLORIDA P.E. No 73778
BUILDING DROPS, INC
1900 NE MIAMI COURT, SUITE 2-15
MIAMI, FL 33132
FBPE CERT. OF AUTHORIZATION No. 29578

FL #: FL47874

DATE: 09.10.2025

DWG. BY: MS | CHK. BY: HFN

SCALE: NTS

DWG. #: MWA007

SHEET: 1 OF 7

10/20/2025 5:01 PM
c:\users\mengqisun\building drops, inc\building drops landing - common\projects\millwork artisans\fbc-25-0712 - fbc submittal - steel bi-fold and lift & slide systems\dwgs\mwa007.dwg

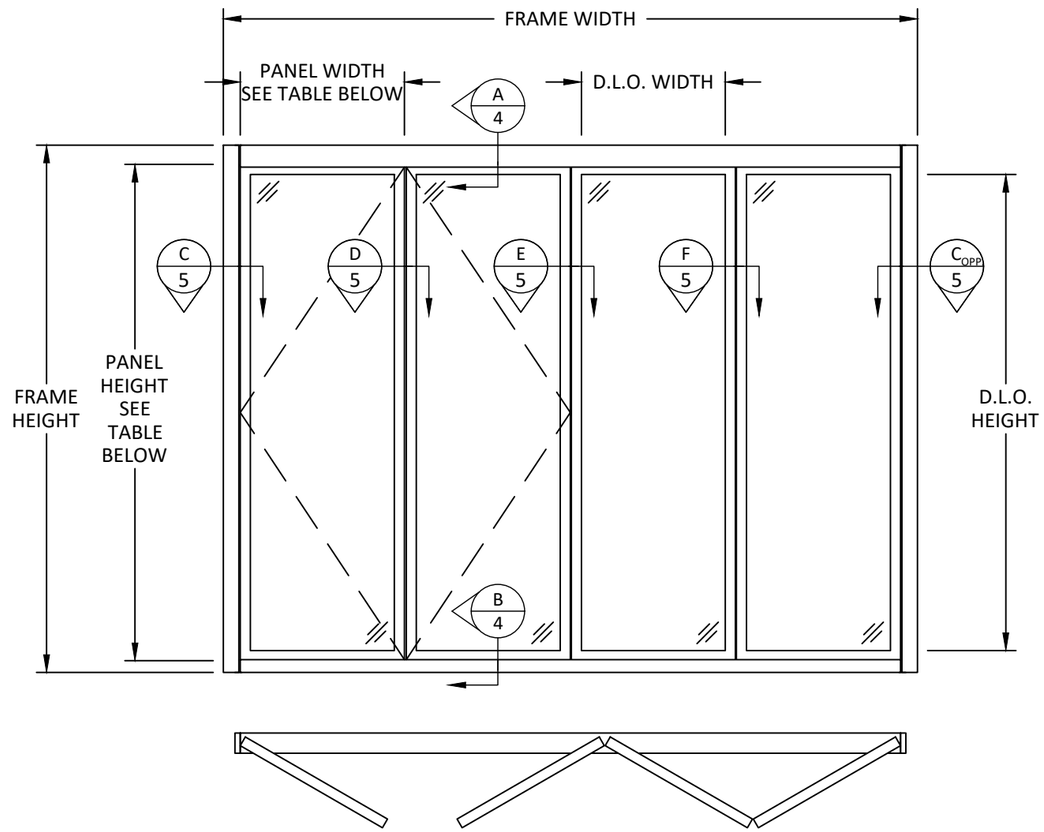

TYPICAL ELEVATION

FRAME HEIGHT = PANEL HEIGHT + 6 1/8"
FRAME WIDTH = 4 × PANEL WIDTH + 2 13/16"

D.L.O. HEIGHT = PANEL HEIGHT - 4"
D.L.O. WIDTH = PANEL WIDTH - 4"

DESIGN PRESSURE TABLE (+/- PSF)

PANEL HEIGHT (IN.)	PANEL WIDTH (IN.)						
	24	27	30	32.5	33	36	39
80	55.00	55.00	55.00	55.00	54.05	48.98	44.79
81	55.00	55.00	55.00	55.00	54.05	48.98	-
84	55.00	55.00	55.00	55.00	54.05	48.98	-
87	55.00	55.00	55.00	55.00	54.05	48.98	-
90	55.00	55.00	55.00	55.00	54.05	-	-
93	55.00	55.00	55.00	55.00	54.05	-	-
96	55.00	55.00	55.00	55.00	54.05	-	-
98.25	55.00	55.00	55.00	55.00	-	-	-
99	55.00	55.00	55.00	-	-	-	-
102	55.00	55.00	55.00	-	-	-	-
105	55.00	55.00	55.00	-	-	-	-
107	55.00	55.00	55.00	-	-	-	-

MILLWORK ARTISANS, LLC
4600 GOER DR STE 201
NORTH CHARLESTON, SC 29406
PH: (843) 577-3348

TITLE:
METAL BI-FOLD DOOR (HVHZ) (IMPACT)
TYPICAL ELEVATION & DESIGN PRESSURE TABLE

PREPARED BY:
BUILDING DROPS, INC.
1900 NE MIAMI COURT, SUITE 2-15
MIAMI, FL 33132
PH: (954) 399-8478
FAX: (954) 744-4738
WEB: www.buildingdrops.com

REMARKS	BY	DATE

THE INSTALLATION DETAILS DESCRIBED HEREIN ARE GENERIC AND MAY NOT REFLECT ACTUAL CONDITIONS FOR A SPECIFIC SITE. IF SITE CONDITIONS CAUSE INSTALLATION TO DEVIATE FROM THE REQUIREMENTS DETAILED HEREIN, A LICENSED ENGINEER OR ARCHITECT SHALL PREPARE SITE SPECIFIC DOCUMENTS FOR USE WITH THIS DOCUMENT.

HERMES F. NORERO
LICENSE
No. 73778
STATE OF
FLORIDA
PROFESSIONAL ENGINEER

HERMES F. NORERO P.E.
FLORIDA P.E. No 73778
BUILDING DROPS, INC
1900 NE MIAMI COURT, SUITE 2-15
MIAMI, FL 33132
FBPE CERT. OF AUTHORIZATION No. 29578

FL #: FL47874
DATE: 09.10.2025
DWG. BY: MS
CHK. BY: HFN
SCALE: NTS
DWG. #: MWA007
SHEET: 2 OF 7

10/20/2025 5:01 PM
c:\users\mergdsun\building drops, inc\building drops landing - common\projects\millwork artisans\fbc-25-0712 - fbc submittal - steel bi-fold and lift & slide systems\dwgs\mwa007.dwg

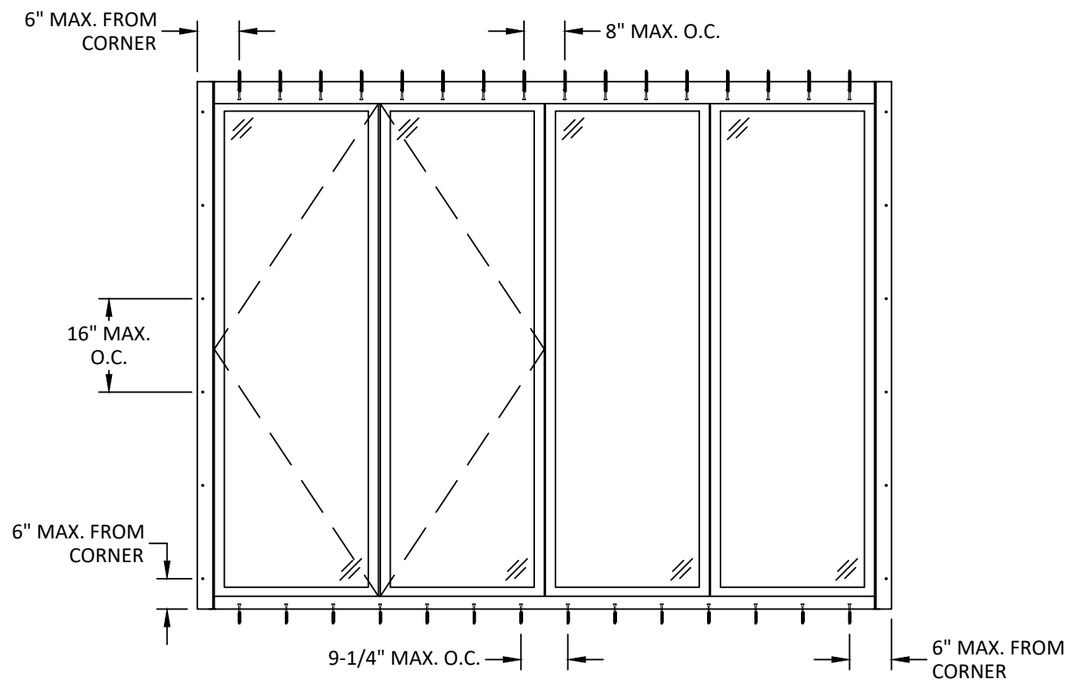

ANCHOR LAYOUT

MILLWORK ARTISANS, LLC
4600 GOER DR STE 201
NORTH CHARLESTON, SC 29406
PH: (843) 577-3348

TITLE:
METAL BI-FOLD DOOR
(HVHZ) (IMPACT)
ANCHOR LAYOUT

PREPARED BY:
BUILDING DROPS, INC.
1900 NE MIAMI COURT, SUITE 2-15
MIAMI, FL 33132
PH: (954) 399-8478
FAX: (954) 744-4738
WEB: www.buildingdrops.com

REMARKS	BY	DATE

THE INSTALLATION DETAILS DESCRIBED HEREIN ARE GENERIC AND MAY NOT REFLECT ACTUAL CONDITIONS FOR A SPECIFIC SITE. IF SITE CONDITIONS CAUSE INSTALLATION TO DEVIATE FROM THE REQUIREMENTS DETAILED HEREIN, A LICENSED ENGINEER OR ARCHITECT SHALL PREPARE SITE SPECIFIC DOCUMENTS FOR USE WITH THIS DOCUMENT.

HERMES F. NORERO
LICENSE
No. 73778
STATE OF
FLORIDA
PROFESSIONAL ENGINEER

HERMES F. NORERO P.E.
FLORIDA P.E. No 73778
BUILDING DROPS, INC
1900 NE MIAMI COURT, SUITE 2-15
MIAMI, FL 33132
FBPE CERT. OF AUTHORIZATION No. 29578

FL #: FL47874

DATE: 09.10.2025

DWG. BY: MS

CHK. BY: HFN

SCALE: NTS

DWG. #: MWA007

SHEET: 3 OF 7

10/20/2025 5:01 PM
c:\users\mengdsun\building drops, inc\building drops landing - common\projects\millwork artisans\fbc-25-0712 - fbc submittal - steel bi-fold and lift & slide systems\dwgs\mwa007.dwg

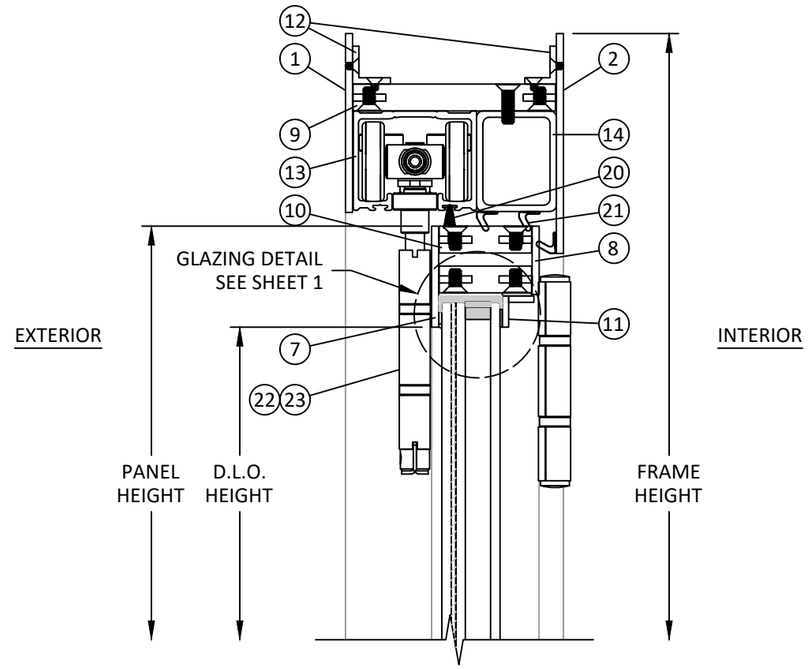

A/4 VERTICAL SECTION

DOOR HEAD

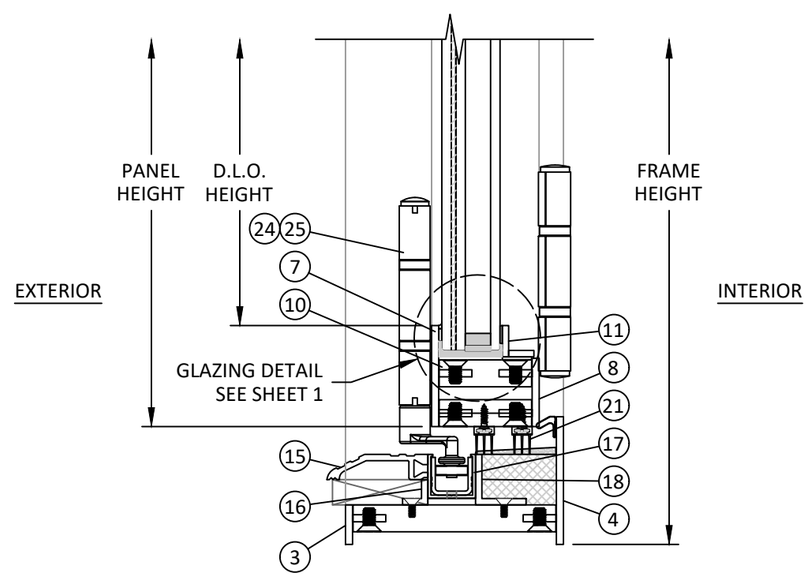

B/4 VERTICAL SECTION

DOOR SILL

MILLWORK artisans

MILLWORK ARTISANS, LLC
4600 GOER DR STE 201
NORTH CHARLESTON, SC 29406
PH: (843) 577-3348

TITLE: METAL BI-FOLD DOOR (HVHZ) (IMPACT) VERTICAL SECTIONS

PREPARED BY: BUILDING DROPS, INC.
1900 NE MIAMI COURT, SUITE 2-15
MIAMI, FL 33132
PH: (954) 399-8478
FAX: (954) 744-4738
WEB: www.buildingdrops.com

REMARKS	BY	DATE

THE INSTALLATION DETAILS DESCRIBED HEREIN ARE GENERIC AND MAY NOT REFLECT ACTUAL CONDITIONS FOR A SPECIFIC SITE. IF SITE CONDITIONS CAUSE INSTALLATION TO DEVIATE FROM THE REQUIREMENTS DETAILED HEREIN, A LICENSED ENGINEER OR ARCHITECT SHALL PREPARE SITE SPECIFIC DOCUMENTS FOR USE WITH THIS DOCUMENT.

HERMES F. NORERO
LICENSE
No. 73778
STATE OF
FLORIDA
PROFESSIONAL ENGINEER

HERMES F. NORERO P.E.
FLORIDA P.E. No 73778
BUILDING DROPS, INC
1900 NE MIAMI COURT, SUITE 2-15
MIAMI, FL 33132
FBPE CERT. OF AUTHORIZATION No. 29578

FL #: FL47874

DATE: 09.10.2025

DWG. BY: MS

CHK. BY: HFN

SCALE: NTS

DWG. #: MWA007

SHEET: 4 OF 7

10/20/2025 5:01 PM
c:\users\mengisun\building drops, inc\building drops landing - common\projects\millwork artisans\fbc-25-0712 - fbc submittal - steel bi-fold and lift & slide systems\dwgs\mwa007.dwg

10/20/2025 5:01 PM
c:\users\mengisun\building drops, inc\building drops landing - common\projects\millwork artisans\bc-25-0712 - fbc submittal - steel bi-fold and lift & slide systems\dwgs\mwa007.dwg

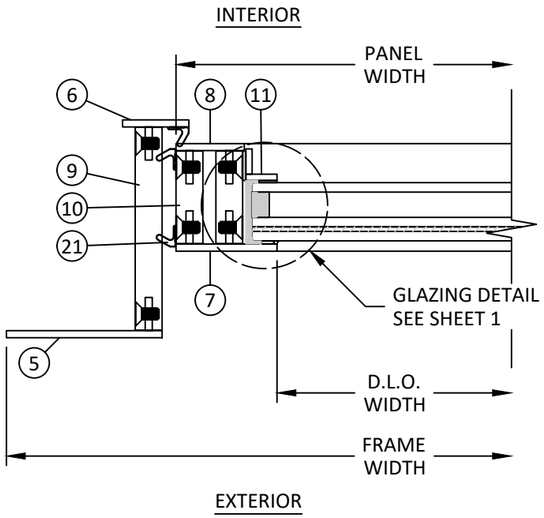

C/5 HORIZONTAL SECTION
DOOR JAMB

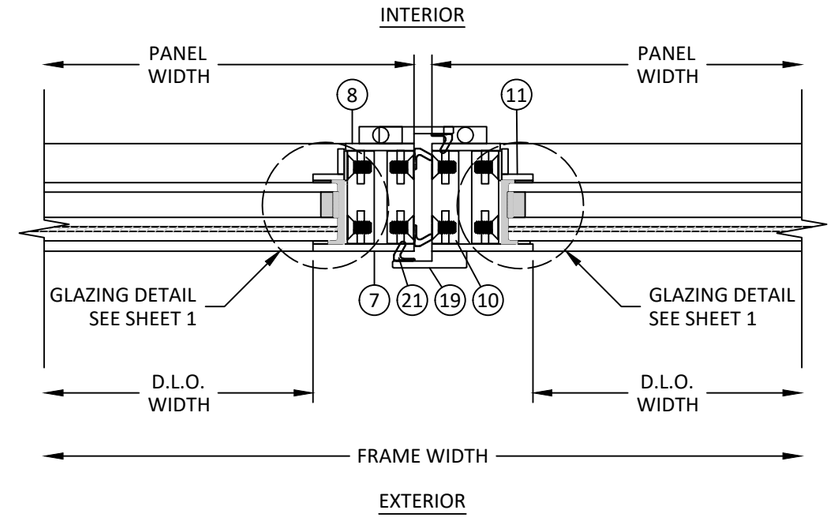

D/5 HORIZONTAL SECTION
MEETING STILE

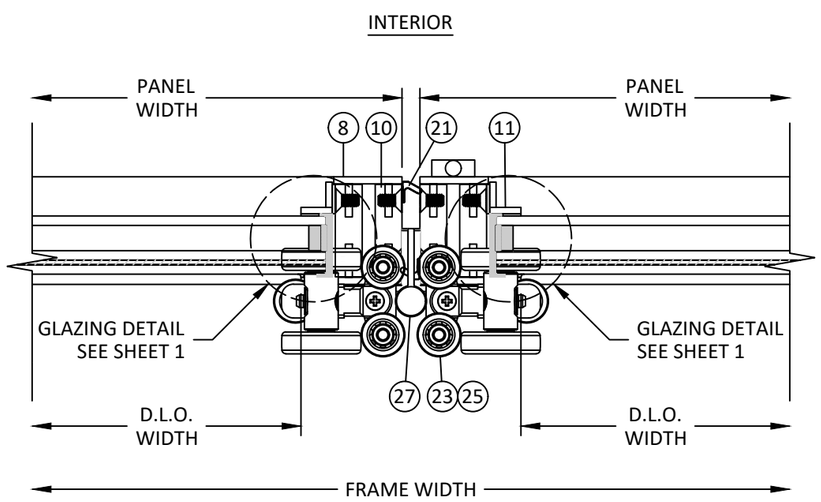

E/5 HORIZONTAL SECTION
INTERLOCK

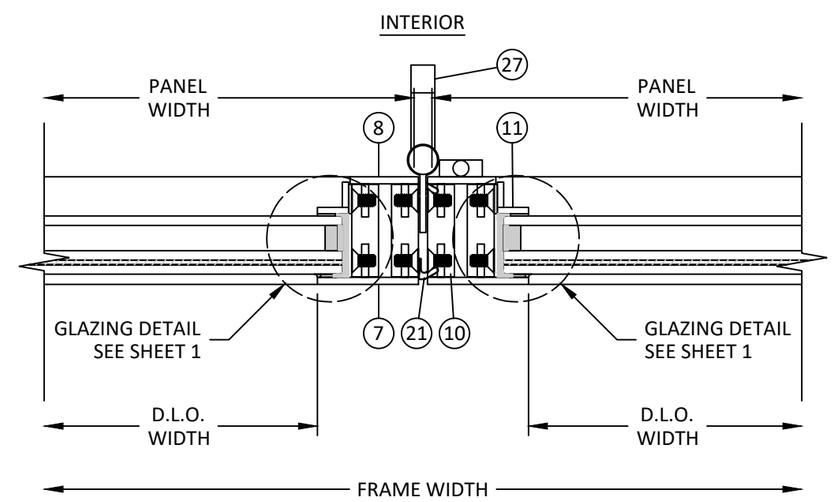

F/5 HORIZONTAL SECTION
INTERLOCK

MILLWORK artisans
MILLWORK ARTISANS, LLC
4600 GOER DR STE 201
NORTH CHARLESTON, SC 29406
PH: (843) 577-3348

TITLE: METAL BI-FOLD DOOR (HVHZ) (IMPACT) HORIZONTAL SECTIONS

PREPARED BY:
BUILDING DROPS, INC.
1900 NE MIAMI COURT, SUITE 2-15
MIAMI, FL 33132
PH: (954) 399-8478
FAX: (954) 744-4738
WEB: www.buildingdrops.com

REMARKS	BY	DATE

THE INSTALLATION DETAILS DESCRIBED HEREIN ARE GENERIC AND MAY NOT REFLECT ACTUAL CONDITIONS FOR A SPECIFIC SITE. IF SITE CONDITIONS CAUSE INSTALLATION TO DEVIATE FROM THE REQUIREMENTS DETAILED HEREIN, A LICENSED ENGINEER OR ARCHITECT SHALL PREPARE SITE SPECIFIC DOCUMENTS FOR USE WITH THIS DOCUMENT.

HERMES F. NORERO
LICENSE
No. 73778
STATE OF FLORIDA
PROFESSIONAL ENGINEER

HERMES F. NORERO P.E.
FLORIDA P.E. No 73778
BUILDING DROPS, INC
1900 NE MIAMI COURT, SUITE 2-15
MIAMI, FL 33132
FBPE CERT. OF AUTHORIZATION No. 29578

FL #: FL47874

DATE: 09.10.2025

DWG. BY: MS | CHK. BY: HFN

SCALE: NTS

DWG. #: MWA007

SHEET: 5 OF 7

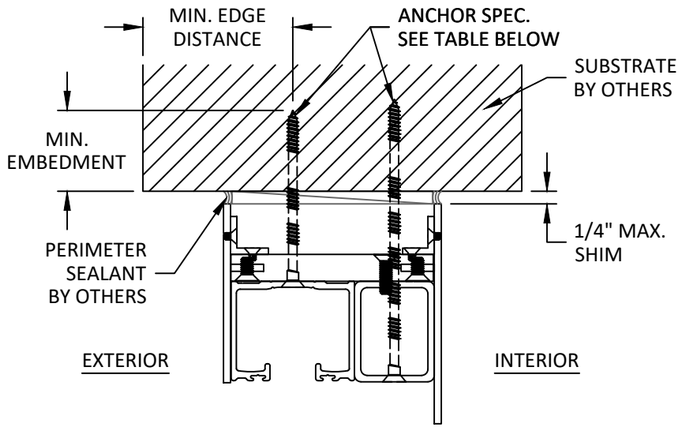

G/6 INSTALLATION DETAIL

DOOR HEAD

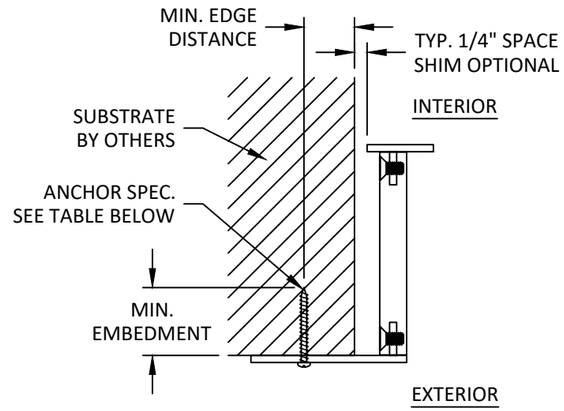

H/6 INSTALLATION DETAIL

DOOR JAMB

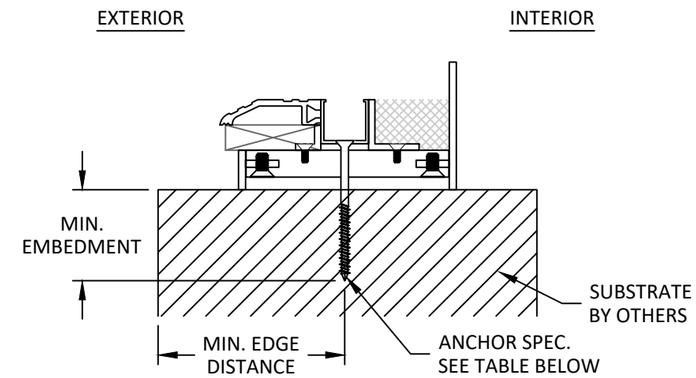

I/6 INSTALLATION DETAIL

DOOR SILL

INSTALLATION NOTES:

1. FOR INSTALLATION AT HEAD, TWO (2) INSTALLATION ANCHORS INTO SUBSTRATE ARE REQUIRED AT EACH ANCHOR LOCATION.
2. FOR INSTALLATION AT JAMBS AND SILL, ONE (1) INSTALLATION ANCHOR INTO SUBSTRATE is REQUIRED AT EACH ANCHOR LOCATION.
3. THE NUMBER OF INSTALLATION ANCHORS DEPICTED IS THE MINIMUM NUMBER OF ANCHORS TO BE USED FOR PRODUCT INSTALLATION OF THE MAXIMUM SIZE LISTED.
4. INSTALL INDIVIDUAL INSTALLATION ANCHORS WITHIN A TOLERANCE OF ±1/4 INCH THE DEPICTED LOCATION & SPACING IN THE ANCHOR LAYOUT DETAILS (I.E., WITHOUT CONSIDERATION OF TOLERANCES). TOLERANCES ARE NOT CUMULATIVE FROM ONE INSTALLATION ANCHOR TO THE NEXT.
5. SHIM AS REQUIRED AT EACH INSTALLATION ANCHOR WITH LOAD BEARING SHIM(S). MAXIMUM ALLOWABLE SHIM STACK TO BE 1/4 INCH. SHIM WHERE SPACE OF 1/16 INCH OR GREATER OCCURS. SHIM(S) SHALL BE CONSTRUCTED OF HIGH DENSITY PLASTIC OR BETTER.
6. FOR CONCRETE OPENINGS, A 1X WOOD BUCK MAY BE USED (OPTIONAL) AS LONG AS THE MINIMUM EMBEDMENT AND EDGE DISTANCE REQUIREMENTS ARE STILL MET WITHIN THE CORRESPONDING HOST SUBSTRATE. SEE GENERAL NOTE #3 ON SHEET 1 FOR MORE INFORMATION.
7. MINIMUM EMBEDMENT AND EDGE DISTANCE EXCLUDE WALL FINISHES, INCLUDING BUT NOT LIMITED TO STUCCO, FOAM, BRICK VENEER, AND SIDING.
8. INSTALLATION ANCHORS AND ASSOCIATED HARDWARE MUST BE MADE OF CORROSION RESISTANT MATERIAL OR HAVE A CORROSION RESISTANT COATING.
9. INSTALLATION ANCHORS SHALL BE INSTALLED IN ACCORDANCE WITH ANCHOR MANUFACTURER'S INSTALLATION INSTRUCTIONS AND ANCHORS SHALL NOT BE USED IN SUBSTRATES WITH STRENGTHS LESS THAN THE MINIMUM STRENGTH SPECIFIED BY THE ANCHOR MANUFACTURER.

ANCHOR SCHEDULE

LOCATION	ANCHOR TYPE	SUBSTRATE	MIN. EMBEDMENT	MIN. EDGE DISTANCE
HEAD/SILL	#14 WOOD SCREW	WOOD: MIN. S.G. = 0.55	1-1/2"	1"
	1/4" GRADE 5 SELF-DRILLING/ SELF-TAPPING SCREW	STEEL: MIN. 18 GA. MIN. Fy = 33 ksi	3 THREADS MIN PENETRATION BEYOND METAL	1/2"
		ALUMINUM: MIN. 1/8" THICK MIN. 6063-T5		
	1/4" ITW TAPCON	CONCRETE: MIN. f'c = 3000 psi	1"	1-3/4"
JAMB	#10 WOOD SCREW	WOOD: MIN. S.G. = 0.55	1-1/2"	3/4"
	#10 GRADE 5 SELF-DRILLING/ SELF-TAPPING SCREW	STEEL: MIN. 18 GA. MIN. Fy = 33 ksi	3 THREADS MIN PENETRATION BEYOND METAL	1/2"
		ALUMINUM: MIN. 1/8" THICK MIN. 6063-T5		
	1/4" ITW TAPCON	CONCRETE: MIN. f'c = 3000 psi	1"	1"

MILLWORK artisans

MILLWORK ARTISANS, LLC
4600 GOER DR STE 201
NORTH CHARLESTON, SC 29406
PH: (843) 577-3348

TITLE: METAL BI-FOLD DOOR (HVHZ) (IMPACT) INSTALLATION DETAILS & NOTES

PREPARED BY: BUILDING DROPS, INC.
1900 NE MIAMI COURT, SUITE 2-15
MIAMI, FL 33132
PH: (954) 399-8478
FAX: (954) 744-4738
WEB: www.buildingdrops.com

REMARKS	BY	DATE

THE INSTALLATION DETAILS DESCRIBED HEREIN ARE GENERIC AND MAY NOT REFLECT ACTUAL CONDITIONS FOR A SPECIFIC SITE. IF SITE CONDITIONS CAUSE INSTALLATION TO DEVIATE FROM THE REQUIREMENTS DETAILED HEREIN, A LICENSED ENGINEER OR ARCHITECT SHALL PREPARE SITE SPECIFIC DOCUMENTS FOR USE WITH THIS DOCUMENT.

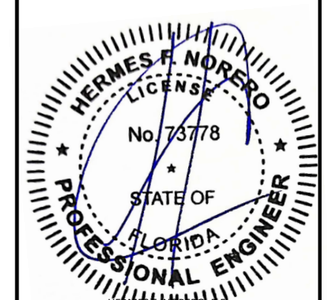

HERMES F. NORERO P.E.
FLORIDA P.E. No 73778
BUILDING DROPS, INC
1900 NE MIAMI COURT, SUITE 2-15
MIAMI, FL 33132
FBPE CERT. OF AUTHORIZATION No. 29578

FL #: FL47874

DATE: 09.10.2025

DWG. BY: MS | CHK. BY: HFN

SCALE: NTS

DWG. #: MWA007

SHEET: 6 OF 7

10/20/2025 5:01 PM
c:\users\mengqisun\building drops, inc\building drops landing - common\projects\millwork artisans\fbc-25-0712 - fbc submittal - steel bi-fold and lift & slide systems\dwgs\mwa007.dwg

BILL OF MATERIALS

ITEM #	DESCRIPTION	MATERIAL
1	FRAME EXTERIOR - HEAD	STEEL
2	FRAME INTERIOR - HEAD	STEEL
3	FRAME EXTERIOR - SILL	STEEL
4	FRAME INTERIOR - SILL	STEEL
5	FRAME EXTERIOR - JAMB	STEEL
6	FRAME INTERIOR - JAMB	STEEL
7	RAIL/STILE EXTERIOR	STEEL
8	RAIL/STILE INTERIOR	STEEL
9	FRAME BAR - HEAD, SILL, & JAMB	GRP
10	RAIL/STILE BAR	GRP
11	GLASS STOP	STEEL
12	FRAME HEAD ANGLE	ALUMINUM 6063-T5
13	HEAD TRACK	ALUMINUM 6063-T6
14	FRAME HEAD TUBE	STEEL
15	THRESHOLD	STEEL
16	FRAME SILL ANGLE	ALUMINUM 6063-T5
17	SILL CHANNEL	ALUMINUM 6063-T6
18	FRAME SILL ANGLE	ALUMINUM 6063-T5
19	ASTRAGAL	STEEL
20	WEATHERSTRIP	FIBERGLASS
21	WEATHERSTRIP	RUBBER
22	CENTOR E4 TOP PIVOT	-
23	CENTOR E4 INTERMEDIATE CARRIER	-
24	CENTOR E4 BOTTOM PIVOT	-
25	CENTOR E4 INTERMEDIATE FLOOR GUIDE	-
26	CENTOR E4 WALL PIVOT	-
27	OFFSET HINGE	-

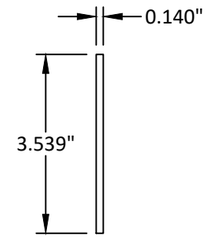

1 FRAME EXTERIOR - HEAD

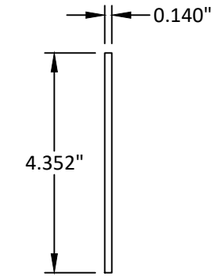

2 FRAME INTERIOR - HEAD

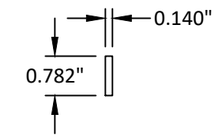

3 FRAME EXTERIOR - SILL

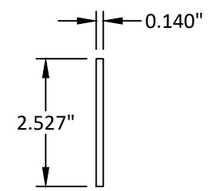

4 FRAME INTERIOR - SILL

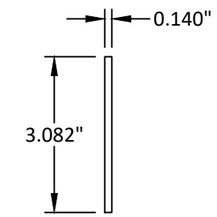

5 FRAME EXTERIOR - JAMB

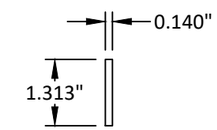

6 FRAME INTERIOR - JAMB

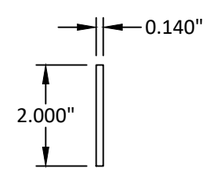

7 RAIL/STILE EXTERIOR

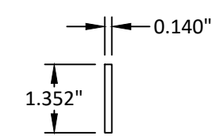

8 RAIL/STILE INTERIOR

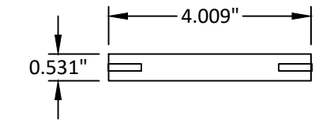

9 FRAME BAR - HEAD, SILL, & JAMB

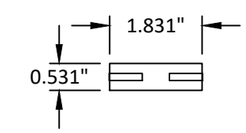

10 RAIL/STILE BAR

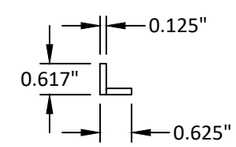

11 GLASS STOP

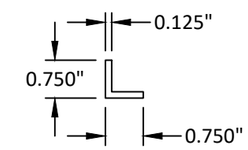

12 FRAME HEAD ANGLE

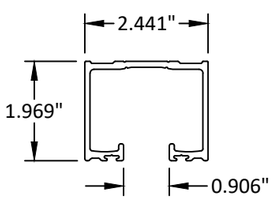

13 HEAD TRACK

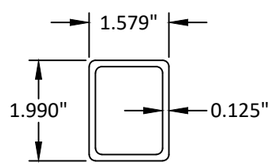

14 FRAME HEAD TUBE

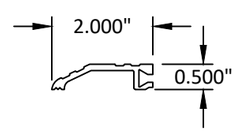

15 THERSHOLD

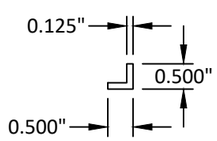

16 FRAME SILL ANGLE

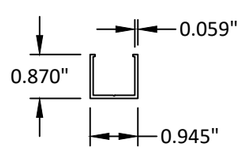

17 SILL CHANNEL

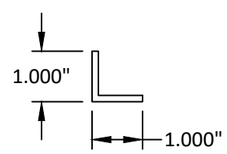

18 FRAME SILL ANGLE

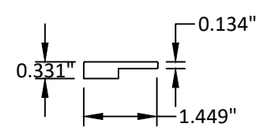

19 ASTRAGAL

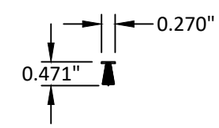

20 WEATHERSTRIP

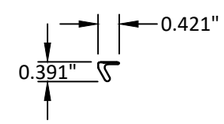

21 WEATHERSTRIP

MILLWORK artisans

MILLWORK ARTISANS, LLC
4600 GOER DR STE 201
NORTH CHARLESTON, SC 29406
PH: (843) 577-3348

TITLE: METAL BI-FOLD DOOR (HVHZ) (IMPACT)

BILL OF MATERIALS & COMPONENTS

PREPARED BY:
BUILDING DROPS, INC.
1900 NE MIAMI COURT, SUITE 2-15
MIAMI, FL 33132
PH: (954) 399-8478
FAX: (954) 744-4738
WEB: www.buildingdrops.com

REMARKS	BY	DATE

THE INSTALLATION DETAILS DESCRIBED HEREIN ARE GENERIC AND MAY NOT REFLECT ACTUAL CONDITIONS FOR A SPECIFIC SITE. IF SITE CONDITIONS CAUSE INSTALLATION TO DEVIATE FROM THE REQUIREMENTS DETAILED HEREIN, A LICENSED ENGINEER OR ARCHITECT SHALL PREPARE SITE SPECIFIC DOCUMENTS FOR USE WITH THIS DOCUMENT.

HERMES F. NORERO P.E.
FLORIDA P.E. No 73778
BUILDING DROPS, INC
1900 NE MIAMI COURT, SUITE 2-15
MIAMI, FL 33132
FBPE CERT. OF AUTHORIZATION No. 29578

FL #: FL47874

DATE: 09.10.2025

DWG. BY: MS | CHK. BY: HFN

SCALE: NTS

DWG. #: MWA007

SHEET: 7 OF 7

10/20/2025 5:01 PM
c:\users\mengqisun\building drops, inc\building drops landing - common\projects\millwork artisans\bc-25-0712 - fbc submittal - steel bi-fold and lift & slide systems\dwgs\mwa007.dwg